DWG NO. 307-100-002 SHT 1 REV 1

REVISION STATUS: SHT. # / REV.

REVISIONS

ZONE	REV	DESCRIPTION	DATE	APPROVED

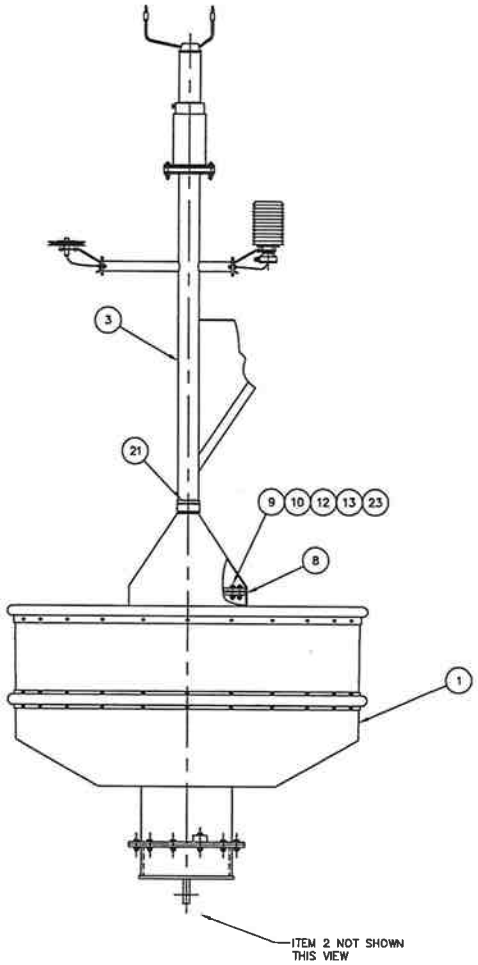

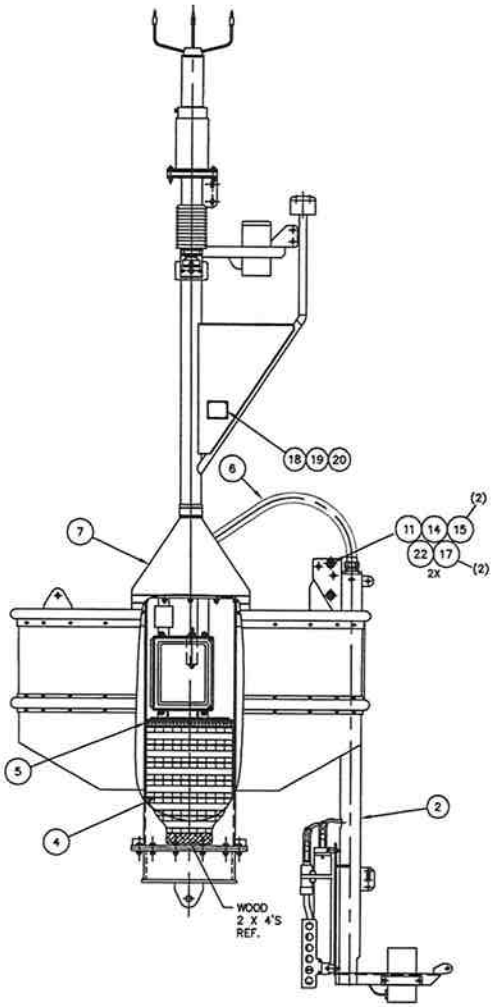

NOTES:

1. FOR MAST SHIPPING CONFIGURATION SEE DWG. #279-100-024.

PARTS LIST

QTY. REQ.	PART NO.	DESCRIPTION	MATERIAL SPECIFICATION	ZONE	ITEM NO.
					26
					25
					24
12		HEX JAM NUT, 3/8"-16UNC	S/S 316		23
2		HEX JAM NUT, 1/2"-13UNC	S/S 316		22
A/R	#75735A65	2" FIBERGLASS TAPE	McMASTER-CARR		21
4		#4-40UNC HEX "NYLOCK" NUT	S/S		20
4		PAN HD. SCREW, #4-40UNC X 3/8" LG	S/S		19
1	291-100-014	NAMEPLATE	S.O.S.I.		18
4	#SWS3022	NYLON SHOULDER WASHER, 5/8"	"OLANDER"		17
1	# 80005K66	TIE WRAPS	McMASTER-CARR		16
4		WASHER DIA.1/2"	S/S 316		15
2		HEX NUT, 1/2"-13UNC	S/S 316		14
12		WASHER DIA.3/8"	S/S 316		13
12		HEX NUT, 3/8"-16UNC	S/S 316		12
2	FULLY THREADED	H.H.BOLT DIA 1/2"-13UNC @ 2 1/2"	S/S 316		11
12	#SWS2562	NYLON SHOULDER WASHER, 3/8"	"OLANDER"		10
12		H.H.C.S. 3/8"-16UNC X 1 3/4"	S/S 316		9
1	261-100-013	GASKET	S.O.S.I.		8
1	280-100-012	SUN SHIELD	S.O.S.I.		7
1	261-100-040	CONDUIT	S.O.S.I.		6
1	261-100-023	SPACER	S.O.S.I.		5
1	292-100-036	BATTERY PACK	S.O.S.I.		4
1	307-100-004	SURFACE MAST ASSEMBLY	S.O.S.I.		3
1	293-100-008	SUBSURFACE MAST ASSEMBLY	S.O.S.I.		2
1	261-100-004	BUOY BODY	S.O.S.I.		1

PROPRIETARY INFORMATION

THIS DRAWING IS THE PROPERTY OF SOUND OCEAN SYSTEMS, INC. AND IS NOT TO BE COPIED, NORMED OR REPRODUCED WITHOUT THE WRITTEN CONSENT OF SOUND OCEAN SYSTEMS, INC.

NEXT ASSY | USED ON

APPLICATION

UNLESS OTHERWISE SPECIFIED:
1. DO NOT SCALE DRAWING
2. ALL DIMENSIONS ARE IN INCHES
3. ALL DIMENSIONS APPLY AFTER PLATING OR COATING
4. REMOVE ALL BURRS. BREAK SHARP EDGES .005 MAX. ALL MACHINED SURFACES 125

TOLERANCES

.X ±.1	MACH.
.XX ±.03	NOT MT
.XXX ±.010	MACHINED ±0°30'

DRAFTER	W.C.G.	11/3/93
ENGINEER		
MANUF. ENGR.		
CUSTOMER		
QUALITY		
PRODUCTION		
APPROVED		
APPROVED		

SOUND OCEAN SYSTEMS, INC.
P.O. BOX 2978, REDMOND, WASHINGTON 98073 U.S.A.
(425) 868-1834

ENHANCED BUOY ASSY
ODB-48-1500-A

SIZE D | CAGE CODE 0K2D8 | DWG NO. 307-100-002

SCALE: 1/8 | SHEET 1 OF 1

ECN NO: | CHECK LEVEL | CONTROL CLASS

AUTOCAD GENERATED DRAWING
FILE NAME: 307002